Resiliency Analysis for the Development of Microgrid Architecture against Climate-Driven Events in the Dominican Republic's Electric Systems

QUARTERLY TECHNICAL REPORT (15/01/2022)

Table of Content

1. Quarterly Project Summary

1.1. Ongoing Research

1.1.1. Indicative Plan for Critical Energy Infrastructure (Report for Vice Minister of Security and Energy Infrastructure (VSEI))

The VSEI's new administration is now mapping the Critical Energy Infrastructure in the country, creating an Indicative Plan defining how to enhance resiliency across the whole system. PI Ramón Emilio De Jesús-Grullón is the main external researcher and editor for the Plan.

The Plan is derived from an extensive investigation on the effects of Hurricanes María and Irma (2017) on the Energy Infrastructure of Puerto Rico, and draws conclusions from the recommendations made by agencies of the United States Government (e.g. US Department of Energy) and Laboratories such as Rocky Mountain Institute (RMI) to the government of Puerto Rico: PREPA (Puerto Rico Electric Power Authority) and Puerto Rico Energy Commission (PREC), as well as the vision of the Critical Infrastructure Risk Management Framework taken from the National Infrastructure Protection Plan (NIPP) of the United States Government, and of the literature in Energy Infrastructure Risk Management of U.S. Department of Energy Office of Energy Assurance.

After months of research, consulting, and reviewing, the Indicative Plan for the Development of Critical Energy Infrastructure was delivered to the Vice Minister of Security and Infrastructure, Fausto Pérez, to later be sent to the Minister of Energy, Antonio Almonte on December 20, 2021.

For the external consulting process, the draft plan was sent to the state institutions involved: Dominican Electricity Transmission Company (ETED), a state electricity company whose objective is to operate the National Interconnected Electric System (SENI) to provide high voltage electric power transport services to the entire national territory, National Energy Commission (CNE), the institution in charge of designing the policy for the Dominican State in the Energy Sector and the Coordinating Body (OC), which mission is to coordinate the operation of the national interconnected electricity system for a safe and reliable energy supply, at a minimum cost and determine economic transactions, in accordance with the regulations, with an interdependent organization and effective use of resources. Hundreds of comments and doubts were received and filtered to finish the draft.

In the Outreach and Collaboration 3.1.2, the sections on Grid Segmentation and Microgrids included in the Plan are detailed.

1.1.2. OpenDSS-Based Distribution Network Analyzer in Open Source GIS Environment Implementation in EDENORTE (VOLG101).

The ongoing work is focused on solving the technical challenges that have arisen when transcribing EDENORTE's information, contained in the Geographical Information System (GIS), to the OpenDSS terminal.

In order to reduce complexity and to address the current challenges, while also testing the software capabilities and flexibility, the selected distribution networks have been reduced significantly and split into 21 different polygons containing around 7,000 clients. For example, figure 1 contains only 306 loads, which significantly reduces the complexity of the simulation allowing the modelers to look for errors more quickly.

Fig 1 - Polygon 1 out of 21 - VOLG 101 (306 Loads)

A great deal of effort is being invested to fix the software bugs and to increase the simulation output which will allow for further automation. Automating the process allows for faster development on future stages of project development and in terms of being able to transfer knowledge.

Fig 2- Polygon 17 out of 21 - VOLG 101 (202 Loads)

2. Project Events

The MG Research Team organized two webinars, one titled: *"**Enhanced Reliability and Resiliency for the DR Electric Grid: Microgrids"** which was presented to the* Puerto Rico and Caribbean Power and Energy Society (PES), which consists of roughly 85 members including power engineering professionals, students, and associates in the Caribbean. The presentation was designed to showcase our ongoing research, the characteristics of the testbed, the stakeholders involved, the long-term vision and to open up collaboration opportunities.

The other webinar titled: "***Microgrids against Climate-Driven Events in the DR"*** was presented to the USAID Mission in the DR: Erick Conde, Project Management Specialist, SEED Office, José Frank Cuello, our STIP specialist, Aneliya Nikolova, WASH specialist, and Brenda Silverio, Communication specialist

Fig 3 - Project events | "Enhanced Reliability and Resiliency for the DR Electric Grid: Microgrids" (left) | "Microgrids against Climate-Driven Events in the DR" (right)

3. Outreach and Collaborations

3.1. Government Agencies

3.1.1. EDENORTE (Empresa Distribuidora de Electricidad del Norte)

In order to reduce complexity and to address the current challenges, while also testing the software capabilities and flexibility, the selected distribution networks (VOLG101 Feeder) have been split into 21 different polygons containing around 7,000 clients.

The working group created a procedure to reduce the connection tolerance of the load distribution through a manual connection in OpenDSS.

> **Objective:** To segment VOL101 circuit in polygons with uniform loads to correct the proximity and tolerance error, and create a process that encompasses the procedure to be followed in QGIS

Figure 4 showcases how the distribution of loads looks like before the manual correction (left), and how it looks like after (right)

Fig 4 - Manual correction of load distribution on QGIS

3.1.2. VSEI (Viceministerio de Seguridad Energética e Infraestructura)

Objective: Increase the levels of reliability and supply of the energy to important infrastructure through the strategic planning of the development of new Critical Energy Infrastructures.

Methodology: The ultimate goal of the plan is to guide the national effort to manage different risks to the nation's critical infrastructure. To achieve this end in the medium term, national priorities must be collectively identified; articulate clear goals; mitigate risk; measure progress, and adapt based on feedback and the changing environment. Success in this complex endeavor draws on the full spectrum of capabilities, knowledge, and experience from a strong partnership between the institutions involved.

Scope: To achieve this objective and make recommendations and proposals, the following were analyzed:

- The Current Status of the National Interconnected Electric System (SENI)
- The current vulnerabilities of the SENI and the Catastrophic Risks for Network Security.
- A Risk Management Framework for Critical Energy Infrastructure

Fig 5 - National Indicative Plan for the Development of Critical Energy Infrastructure (*Internal Document*)

3.1.3 National Energy Commission (CNE)

The research team and the VSEI contacted CNE's Alternative Sources and Rational Use of Energy Director, Ing. Yeulis Rivas, to discuss the Critical Energy Infrastructure Plan. His main considerations and comments were pointed at isolated/islanded systems; according to his arguments, such facilities should be weighed and included, given that there are precedents that justify it and that could be repeated.

3.1.4. Dominican Electricity Transmission Company (ETED)

The research team and the VSEI contacted the Direction of Strategic Planning of ETED, the observations of the Dominican Electricity Transmission Company were focused on the evolution of the Expansion Plan, clarifying points on meshed networks, limited transmission capacity, and the inclusion of more critical substations to the plan, which were all amended.

3.1.5. Coordinating Body (OC)

The research team and the VSEI reached out to the Operations Manager and Operation Programming offices at the Coordinating Body. Their observations were focused on technical aspects such as: Adding Reactive Compensation in the North, clarifying points on the Centralized Renewable Energy Forecasts capabilities of the OC (Short-Term Operation) and pointing out the need to add more commutation substations to the list of Critical Energy Infrastructure.

3.1.6 VSEI - Energy Storage Systems - Possible Solution to SENI's Reliability Problems

The Vice Ministry of Energy Security and Infrastructure invited PI De Jesús to a keynote conference entitled: "Energy Storage Systems - Possible solution to the reliability problems of SENI" given by Ing. Fausto Pérez Guerrero, Director of engineering and construction company Recurret Energy, a subsidiary of Canadian Solar in Austin Texas.

Resiliency was one of the main topics of the keynote, where energy storage systems were studied to show insights on where this technology can be used in the energy networks to enhance its resiliency.

Fig 6 - Energy Storage Systems - Possible Solution to SENI's Reliability Problems - November 2021

3.1.7 Center for Development and Industrial Competitiveness (PROINDUSTRIA)

PI De Jesús was invited to participate in the first Entrepreneurship and Innovation Fair of the Center for Industrial Development and Competitiveness - ProIndustria, held in the city of Santiago de los Caballeros, Dominican Republic.

An Abstract of the Microgrid Research was showcased for a heterogeneous public, including Governmental Officials (Andres Cueto, General Manager of EDENORTE) Universities (Father Secilio Espinal Espinal, recently appointed as rector of the Pontifical Catholic University Mother and Teacher (PUCMM)) and citizens.

Fig 6 - Entrepreneurship and Innovation Fair of the Center for Industrial Development and Competitiveness - ProIndustria. (left) Father Secilio Espinal (PUCMM's new Rector. (right) Ing. Andres Cueto, General Manager of EDENORTE.

3.2. Non-Governmental Organizations

3.2.1. INTEC (Instituto Tecnológico de Santo Domingo).

CI Rafael Batista is continuing his doctoral formation as a result of networking activities promoted by this project. His doctoral thesis work is going to be fundamental in the formation of networked microgrid systems and the use of optimization techniques for the evaluation of automatic decision rules in the dynamic formation of microgrid systems. This research topic is related and of importance regarding the implementation of our proposed electrical resiliency enhancement algorithms.

3.2.2. Adelante RD | Canal 4RD

PI De Jesús was invited to participate in Esta Mañana, a national TV show, with the intention of communicating the vision of not only the research project on Resiliency and Microgrids, but also other ventures that share the same vision Stor Water and Energía Journal RD. In the segment called AdelanteRD, presented by the Charys Melo and Alex Santiago, the founders talked about their vision, exploring the importance and relevance of the Water-Energy Nexus for Dominican Republic, and to transmit the desire to work with the Dominican state providing institutions such as the Corporación De Acueductos Y Alcantarillados De Santiago (CORAASAN) and EDENORTE, SA, the necessary tools to accelerate their digitization.

Fig 7 - TV Interview at Channel4RD

3.2.3. Energías, Combustibles y Más | Radio program specialized in Energy and Fuels for the DR | ZOL 106.5 FM

PI De Jesús was invited to participate in a national radio show Energías, Combustibles y Más, a segment specialized in Energy and Fuels, broadcast by zol1065fm FM every Tuesday at 8.30PM. In this space, along with his colleagues from other ventures (Stor Water and Energia Journal), PI De Jesus talked about their trajectory, vision, and projects in development, such as:

- Research on Energy Resilience and Microgrids (Implementation Project with EDENORTE, Microgrids Laboratory)
- Energia Journal: Portal to the most relevant of the world of energy and sustainability in the Dominican Republic.
- Stor Water: Data Analysis and Digital Twins for the water sector.

Fig 8 - Energías, Combustibles y Mas Radio Show - ZOL1065FM

URL: https://www.youtube.com/watch?v=gB8BylBlpy8

3.2.4. Puerto Rico and Caribbean Power and Energy Society (PES)

PI Ramón Emilio De Jesús was officially invited to be the Young Professionals and Women in Engineering Liaison for the IEEE PES Innovative Smart Grid Technologies – Latin America (IEEE PES-ISGT LA) 2023 Proposal.

The 2023 ISGT is being heavily geared towards the renewable generation and smart grid industries and the Local Organizing Committee (LOC) has already engaged and gauged the interest of more than 15 companies, with very strong positive feedback. The industry will showcase their technological developments, as well as providing panel presentations, industrial-focused papers, keynote talks, and financial support. Finally, government institutions will be able to provide updates on current regulatory issues. As of December 2021, the LOC has reached out to the main engineering colleges and universities. The University of Puerto Rico (UPR), University Anna G Mendez (UAGM) and Interamerican University (IUPR) have shown interest. The LOC has contacted and is awaiting confirmation from at least two additional institutions: Polytechnic University of Puerto Rico (PUPR) and Turabo University (UTPR). The LOC has also invited Puerto Rico Energy Bureau (PREB), the energy/utility regulator, which has also shown interest in participating. Finally, we have reached out and are expecting responses from industry participants. Communications have been sent to Hitachi/ABB, General Electric, Mitsubishi, and Sweitzer Engineering Laboratories (SEL).

URL: https://drive.google.com/file/d/1Q06sJrXxPpKmN-QwNbk1JiimH7ZABkvz/view?usp=sharing

4. Technical Research Presentations

During this trimester we have not executed any technical presentations due to our focus on solving software bugs and external communications. We are planning to execute a technical presentation in the coming trimester.

5. Potential Development Impacts

5.1. Capacity building in Research

The final setup of the first Hardware in the Loop (HIL) lab, the first available in the country, will enable future research on Electrical Grids related topics. Taking into account that the procedures for setting up the HIL lab are being documented and could be used as guidelines for other research projects implementation.

The preparation of the designated space, equipment location, and installation is being performed in parallel. Training in the use and understanding of the HIL lab equipment is being scheduled and we are promoting the project so that related fields professors and assistants can be a part of the further stages.t.

5.2. Acknowledgment of Industry-Academic Cooperation

Contact has been made with research and development departments of the electrical equipment company (EATON) in order to show the characteristics and capabilities of the Hardware-in-the-loop (HIL) lab that is being constructed and how it can be used for their benefit.

The research team is working on developing the relationship with this company and as well as others to establish a cooperation agreement to add value to their process and to fulfill the lab's purpose.

5.3. Capacity building in the DR Government (Vice Minister of Security and Energy Infrastructure)

With the publication of the Indicative Plan of the Vice Ministry of Security and Energy Infrastructure, the researchers have left a stamp of their ideas and knowledge in the state policy that will promote energy resilience and define the measures to be made in the near future.

5.3. Implementation of OpenDSS in Minister of Energy and Mines (MEM)

As the main Energy Utility companies, part owned by the central government, undergo a homologation process, the work that has been done alongside EDENORTE can be scaled up to the other two energy utilities in the country, EDESUR and EDEESTE. This will enable the desired capacity building of personnel of said utilities and the academic community, also thanks to the Workshops and Webinar that have been held and that will continue in the coming months, as we complete the final steps of the process of documentation and validation.

The use of these tools, once it is completely developed, will have an important impact on the Technical Planning Departments, and in the way the studies are performed, by simplifying how the information is updated in their database for the simulations. Currently the research team is finishing manual validation of the methodology and the tool by completing the circuit under analysis and its different polygons.

6. Challenges

The main challenge so far has been the process of finding and fixing software bugs in the OpenDSS and QGIS plugins. This is mainly due to the high learning curve and the arduous process of cleaning the existing data from EDENORTE. Another important challenge in the medium term will be the creation of shared simulation environments between OpenDSS and MATLAB that remains crucial to the objectives of the research.

Regarding the purchasing process of the lab equipment, the main challenge continues to be the current crisis affecting the supply chain and international shipping. Nevertheless, the manufacturing process of our two main critical components (OpalRT and Taraz Inverter) is completed and the shipping process is currently underway.

7. Future plans

Ongoing research (3-6 months)

1. **Testbed Integration**

   Currently the team is working on the preparation of the laboratory area for the placement and initial testing of the OPALRT real time control system. Network and protected electrical connections are currently being built. The initial validation will be done without the use of the inverters. The inverters are scheduled to arrive in the Dominican Republic in mid-January. The custom clearance process and tax exemption is expected to take about one month. Additionally, we are planning to test the DC power supply in January. We expect that the resistive digital load will be in the Dominican Republic by the end of January but will also have to go through the customs clearance process expected to take a months as well.

2. **Co-simulation studies between OpenDSS and Matlab/Simulink/Python**

   The researchers will explore how RT-HIL systems improve the OpenDSS capabilities, interfacing the data delivered to the platform using analog and digital signals in Real Time (RT). The team will also explore DSS Python: The Unofficial bindings for EPRI's OpenDSS developed by researcher at University of Campinas (Unicamp), as well as Multi-Agent OpenDSS, an open source and scalable distribution grid platform developed by researchers at University of Central Florida.

3. **Centro de Investigación PUCMM (Microrredes)**

   Efforts have been made in contacting other researchers in PUCMM interested in topics related to the transition to SmartGrids and the inclusion of renewable energy distributed generation. The possibility of creating a research group focused on this topic and the integration of the research initiatives in a single laboratory in order to optimize budget and research capabilities is being studied.

4. Training Activities

4.1. Development of additional training courses on OpenDSS and Matlab/Simulink

The main platforms/software to simulate the electrical grid components and interactions have already been identified by the team, as well as training courses on how to utilize them were already developed to build capacity among the students and professionals that will interact with the project. This will serve as a platform for developing future work and investigations. The team will organize workshops on the use and capabilities of these two tools for developing Power Systems simulations and to address studies on specific electrical grid issues. The training courses and workshops will be held at PUCMM with the support of the Engineering faculty and student's committee. Furthermore, these training courses will help the integration of future students into the project as well as serving as a base for the development of the engineering curriculum of the local universities.

4.2. Development of additional training courses on QGIS and OpenDSS integration

The integration of OpenDSS and QGIS has been crucial to have the capability of representing the existing large distribution networks and its components in the scripting language of the OpenDSS software. There are several plugins available under the QGIS stack that help correct and filter the information prior to its translation into the scripting language, as such a course on these special plugins will be very convenient to be linked to the previous OpenDSS course, giving it a broader applicability.

8. Additional information

8.1. Professional Development

8.1.1. ASOFER (Asociación Fomento a las Energías Renovables)

ASOFER's mission is to promote, defend and represent renewable energies in the country to promote responsible growth and protect the right to sustainable development in the Dominican Republic. C.I Abraham Espinal is already a member through his company "Enestar", and the rest of the team is planning to join the association with the idea of not only promoting the research but finding possible collaboration opportunities.

8.2. Microgrid Research Blog

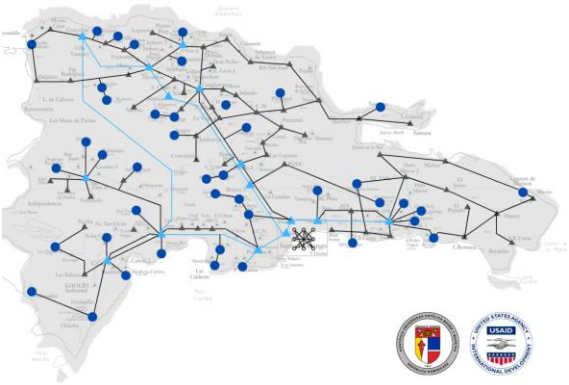

Blog Entry 1 (October 12, 2021) | Towards the Future: The 21st Century Electric Grid

In this blog PI De Jesús laid out the basic principles of his vision on the future of energy, touching on the transactive Grid: Decarbonization, Decentralization, and Digitization, and how it's self-evident we are on the verge of the energy shift that our societies will experience in the coming decades and what need to be done to be part of that transformation in our day-to-day.

URL:https://microgridresearchpucmm.blog/2021/10/12/towards-the-future-the-21st-century-electric-grid/

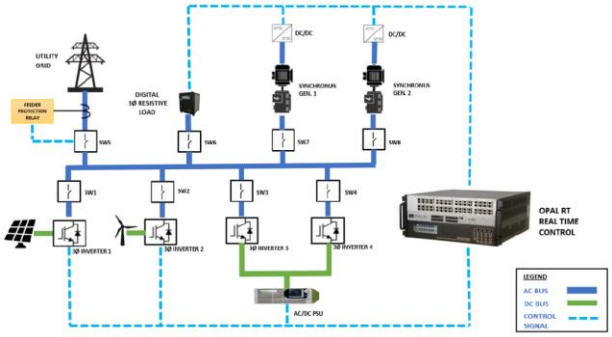

Blog Entry 2 (November 11 , 2021) | IHardware-in-the-Loop Simulation and its Impact on the Design of Power Systems

CI Batista talks about a key technology that we will implement in the Microgrid Testbed: Hardware-in-the-Loop (HIL).

The mission of the PUCMM Microgrids Laboratory is to be a reference for the formulation of improvements in the electrical grid system. Paving the way for policies which aim to enhance the resiliency and the efficiency of Dominican Republic's national electrical grid system.

URL:https://microgridresearchpucmm.blog/2021/11/11/hardware-in-the-loop-simulations/

Blog Entry 3 (January 11, 2022) | Energy Transition and Challenges in the Post COVID Era

CI Espinal highlights the current situation of the ongoing energy transition and the present challenges based on three waves of disruption (Decentralization/Decarbonization, Energy Storage and Electromobility). It also addresses how the pandemic, that continues to affect the world, has changed the outlooks and time estimates on the milestones to be accomplished and on what the future holds for a rapidly changing energy sector.

URL: https://microgridresearchpucmm.blog/2022/01/11/energy-transition-and-challenges-in-the-post-covid-era/

8.3. Microgrid Blog hosted in PUCMM's Research Center

PUCMM has several research and innovation programs that respond to its mission of "searching for scientific solutions to the challenges facing the Dominican people and their global environment."

The Microgrid Research Blog is now hosted in the official webpage and can be seen here: https://investigacion.pucmm.edu.do/microgrid

8.4. Research Assistant

SUMMARY OF COMPLETED TASKS (OCTOBER-DECEMBER 2021)

Date submitted	Completed tasks
6-November-2021	QGIS model error correction (VOLG101 Polygons 19-22)
21-December-2021	QGIS model revision (VOLG101 Polygons 1-6)

TASKS DETAILS:

- **QGIS model error correction (VOLG101 Polygons 19-22**): Checking each load of the polygons 19, 20, 21, and 22 to correct the overlapped ones by manually separating them.

  Objective: Reduce the overlapping loads simulation error on the VOLG101 QGIS model.

- **QGIS model revision (VOLG101 Polygons 1-6)**: Checking the loads and LV conductors of the polygons 1, 2, 3, 4, 5, and 6.

  Objective: Identify some of the possible causes of the errors that resulted in the OpenDSS/QGIS simulation.

Additionally, the research assistant (Juan José Pichardo) is going to start an internship at EDENORTE where he will work with subjects that are relevant to this project.

9. Major Equipment Purchased

Status:

- **Opal RT:** The equipment is in PUCMM facilities, waiting for the connection to NETWORK and UPS systems.
- **Taraz Inverter:** The equipment expected arrival day is mid January. After this, it must complete the customs clearance process.
- **DC power supply**: The equipment is in PUCMM facilities; initial testing is being done.
- **Digital AC resistive load:** Purchase process completed, awaiting for arrival at the end of January.
- **LOAD CENTER**: Equipment is in PUCMM facilities, initial validation of the interconnection as required in the quotation has been done.